Parts List			
ITEM	QTY	PART No.	DESCRIPTION
1	1	BA2314	Ø100 SP Stab 10k Interv J-Lock 3" Weco 1502
2	1	BA2321	Ø100 SP Rec 10k Long-term 3" wJ-Lock 3" WN Sch160 MDS D57
3	1	BA2323	Ø100 SP Prot Stab Vented Long-term
4	1	BA5597	Ø100 SP Park Rec Vented Long-term
5	1	BA4613	Ø100 SP Press Stab 10k Long-term wJ-Lock
6	1	BC1048	Ø100 SP Press Stab 10k Long-term wJ-Lock with Bleed Off Function

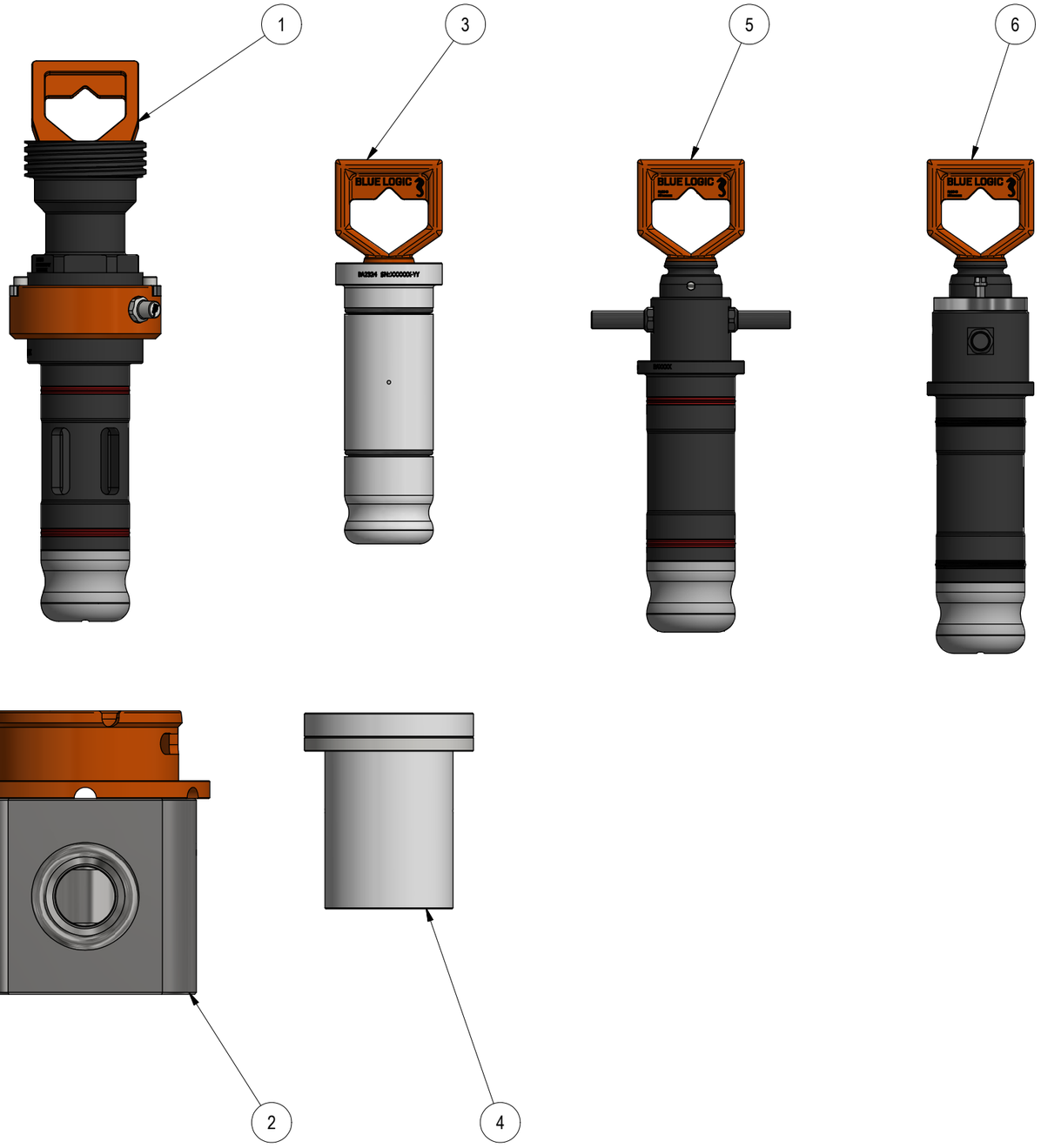

NOTE: 1

ADDITIONAL INFORMATION:

This overview drawing shows the basic versions of the Blue Logic API 17H Type 4 Ø100 SP Stabs and Receptacles. Pressure rating up to 690bar and maximum flow capacity approx. 4500 l/min depending on receptacle outlet. Other versions with regards to number of ports, flow capacity, seal material and hydraulic interface are available.

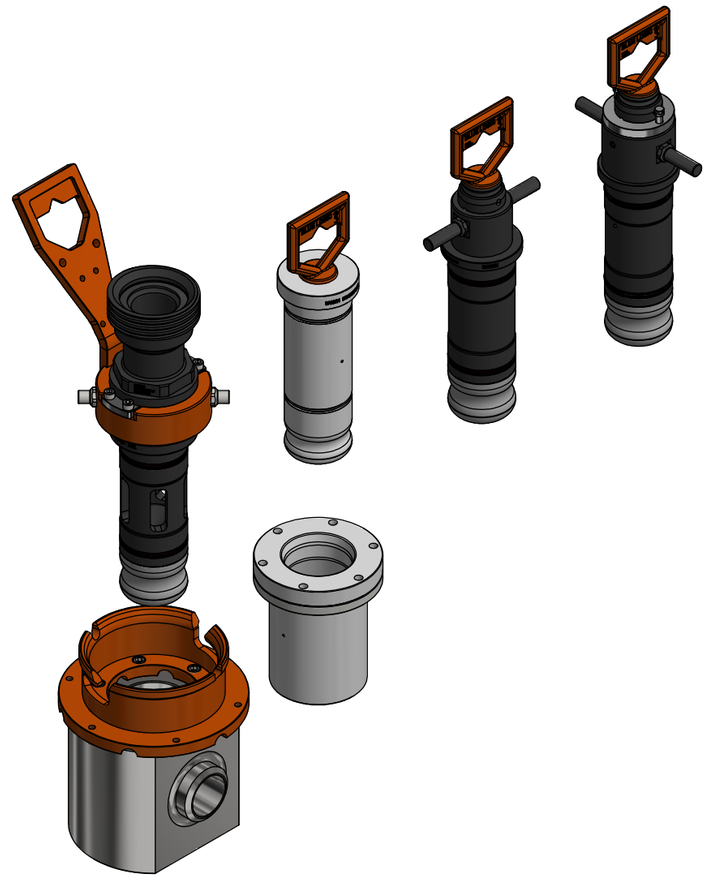

FOR INFORMATION ONLY

Rev.	Date	Reason for issue	Revision change	Made	Chk'd	Appr.
01	20.6.2024	3-IFI (Issued for Information)		HNJ		

BLUE LOGIC

This Drawing is the Property of Blue Logic AS © and must Not be Loaned, Reproduced or Transferred to others without written Permission

Dwg Scale: NTS

Dwg Proj:

Dwg Format: A3

Drawing title: Ø100 Hot Stab System Overview

Drawing number: BC1298

Rev. 01